## A-A

### BULKHEAD 1

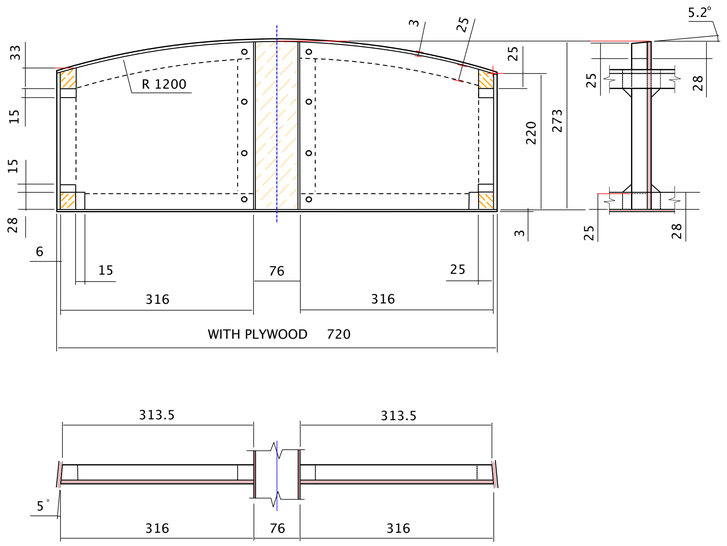


## B-B

### BULKHEAD 2

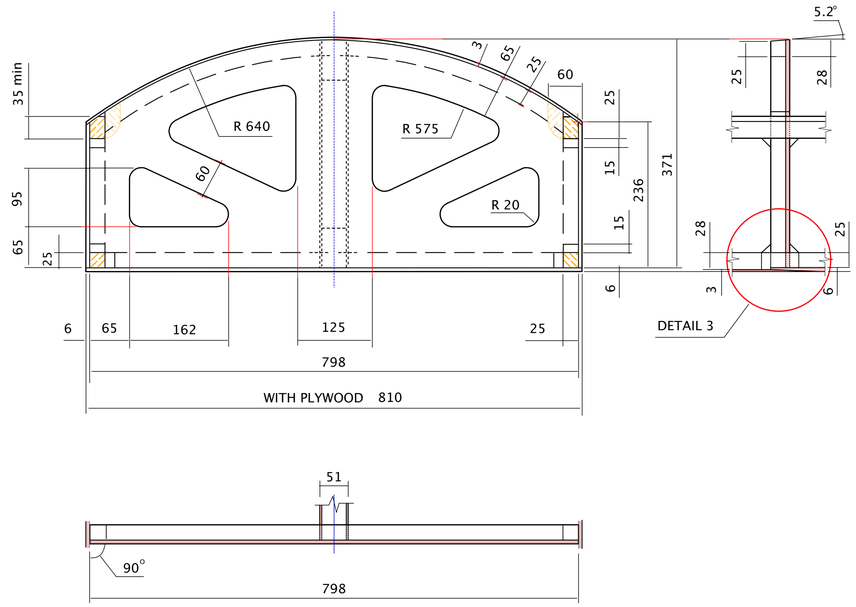


## C-C

### BULKHEAD 3

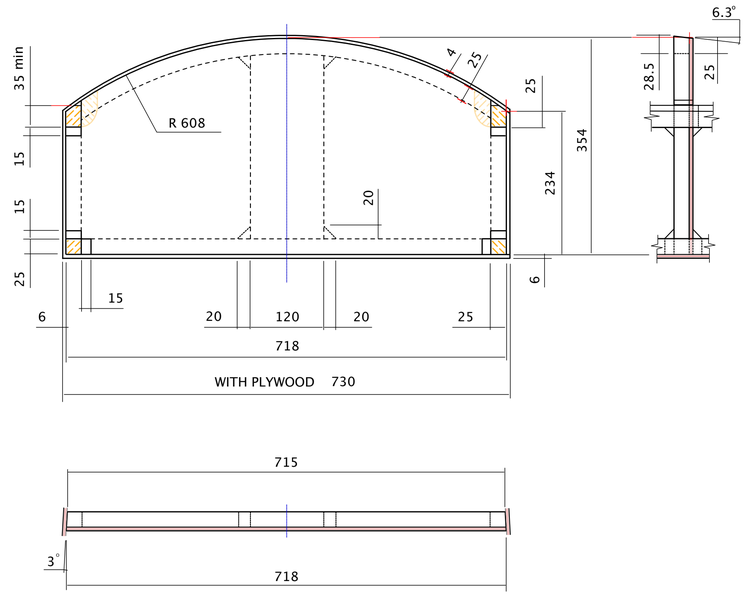


## D-D

### BULKHEAD 4

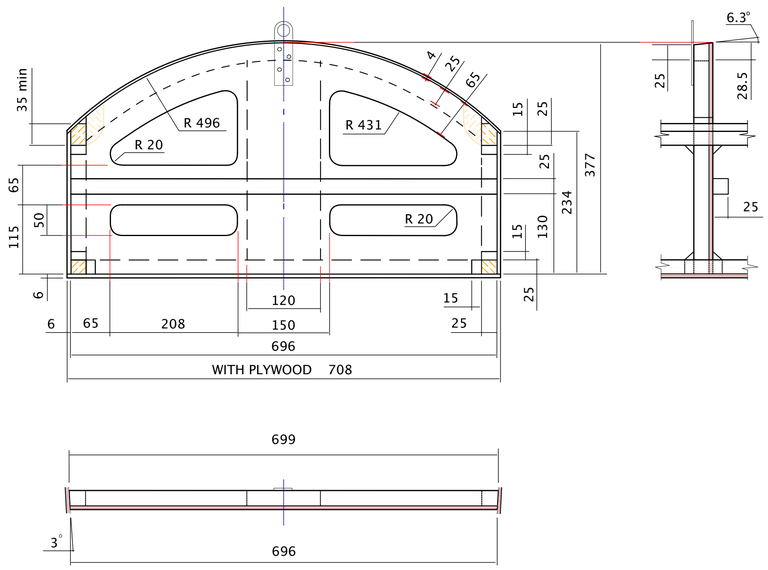


## E-E

### BULKHEAD 5

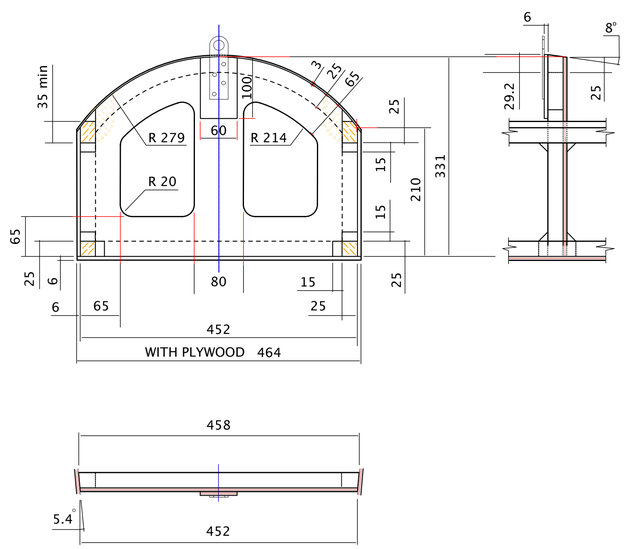


## DETAIL 3

### SCALE 1:1

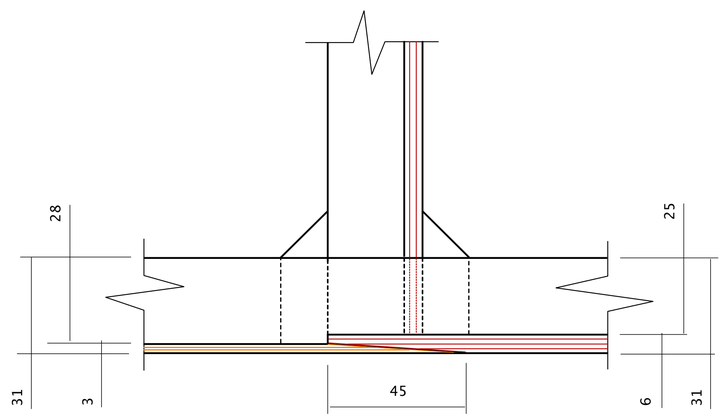

| | NAME | SIGNATURE | DATE |
|---|---|---|---|
| DRAWN | J. KINBERG | J. Kinberg | 2017-12-28 |
| CHK'D | D. SCHUTTE | | |
| CHK'D | A. PADU | | |
| APPV'D | B. ROST | | |
| MFG | | | |
| Q.A | | | |

NOTES:
THE BOTTOM STRINGERS NEED TO BE 28 MM HIGH FWD OF BULKHEAD 2, AT THE TRANSISION BETWEEN 3 MM AND 6 MM COCKPIT FLOOR. SE DETAIL 3

MATERIAL:
WOOD / PLYWOOD

ALL DIMENSIONS IN MM

DO NOT SCALE DRAWING

REVISION: 02

OWNER: IMXVIYRA

TITLE: MONOTYPE-XV FUSELAGE

DWG: FUSELAGE_BULKHEAD'S_A1

A1

SCALE: 1:5/1:1

SHEET: 2 OF 2